Please read and save this Repair Parts Manual. Read this manual and the General Operating Instructions carefully before attempting to assemble, install, operate or maintain the product described. Protect yourself and others by observing all safety information. The Safety Instructions are contained in the General Operating Instructions. Failure to comply with the safety instructions accompanying this product could result in personal injury and/or property damage! Retain instructions for future reference. AMT reserves the right to discontinue any model or change specifications at any time without incurring any obligation.

©2015 AMT Pump Company, A Subsidiary of The Gorman-Rupp Company, All Rights Reserved.

Periodic maintenance and inspection is required on all pumps to ensure proper operation. Unit must be clear of debris and sediment. Inspect for leaks and loose bolts. Failure to do so voids warranty.

1-Inch Dewatering Pump

Refer to pump manual 1808-633-00 for General Operating and Safety Instructions.

DESCRIPTION

1” dewatering pumps are 4-cycle engine driven, self-priming to 20 ft. lift and portable. Pump construction materials include: aluminum, plastic and steel. Shaft seal has Buna N elastomers, carbon head and ceramic seat. Handles liquids from 40º to 180º F (4º to 82º C). For use with nonflammable, non-abrasive liquids compatible with pump component materials.

⚠WARNING

To prevent accidental starting always remove the spark plug, or disconnect and ground the spark plug wire before attempting to service or remove any component.

MECHANICAL SEAL REPLACEMENT

Refer to Figures 1 and 2

IMPORTANT: Always replace the seal seat and seal head (Ref. No. 10) to ensure proper mating of mechanical seal components!

1. Unthread fasteners (Ref. Nos. 13 and 14). Remove casing (Ref. No. 1) and casing seal (Ref. No. 11) from adapter (Ref. No. 6).
2. Unscrew impeller (Ref. No. 8) from the engine shaft and remove the impeller shims (Ref. No. 9).

NOTE: To keep the shaft from turning, remove the shroud from engine and hold the flywheel in place.

3. Unthread fasteners (Ref. No. 16) from engine mounting face.
4. Push seal seat from the adapter recess with a screwdriver.
5. Clean the adapter recess before inserting a new seal seat.
6. Carefully wipe the ceramic surface of the new seal seat with a clean cloth.
7. Wet the rubber portion of the seal with a light coating of soapy water.
8. Press the new seal seat squarely into cavity in the adapter. If the seal seat does not press squarely into the cavity, it can be adjusted in place by pushing on it with the end of a piece of pipe. Always use a piece of cardboard between the pipe and the seal seat to avoid scratching the seal seat. (This is a lapped surface and must be handled very carefully.)
9. After the seal seat is in place, be sure that it is clean and has not been marred.
10. Using a clean cloth, wipe the shaft and make certain that it is perfectly clean.
11. Secure the adapter on the engine mounting face.

⚠ CAUTION

Tighten fasteners EVENLY to avoid cocking rabbet on engine mounting.

12. Apply a light coating of soapy water to the inside rubber portion of seal head and slide onto engine shaft.

⚠ CAUTION

Do not touch or wipe the face of the carbon (black) part of the seal cartridge.

13. Replace impeller shims.
14. Screw impeller back in place, tightening until it is against the shoulder.
15. Install casing seal and remount the pump casing on adapter.

SHIM ADJUSTMENT

1. When installing a replacement engine, adapter, impeller, volute or casing, it may be necessary to vary the number of impeller shims (Ref. No. 9) that will be required. This is easily done by adding one shim more than was removed and reassembling the pump as described in MECHANICAL SEAL REPLACEMENT section.

NOTE: Remove spark plug wire from engine and ground. While tightening the unit together, turn the shaft (by pulling on the recoil starter, etc.); feel for the shaft seizing. If shaft begins to seize before the fasteners are completely tight, disassemble the pump and remove one shim and repeat assembly.

2. Once having added one shim more than original, ensure that the volute (Ref. No. 7) and adapter (Ref. No. 6) are firmly fitted (check fasteners Ref. Nos. 13 & 14). When engine turns freely, add shims until it does strike, then remove one shim. This should allow the proper clearance.
3. Proper running clearance for the impeller should be as close as possible to volute without striking.
4. Follow the above procedure until proper clearance is obtained. This will ensure maximum performance.

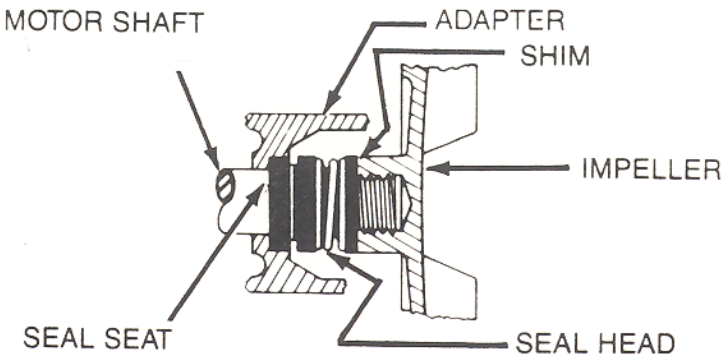

Figure 1 - Mechanical Seal Replacement

1-Inch Dewatering Pump

For Repair Parts contact dealer where pump was purchased.

Please provide following information:
-Model Number
-Serial Number (if any)

Part description and number as shown in parts list

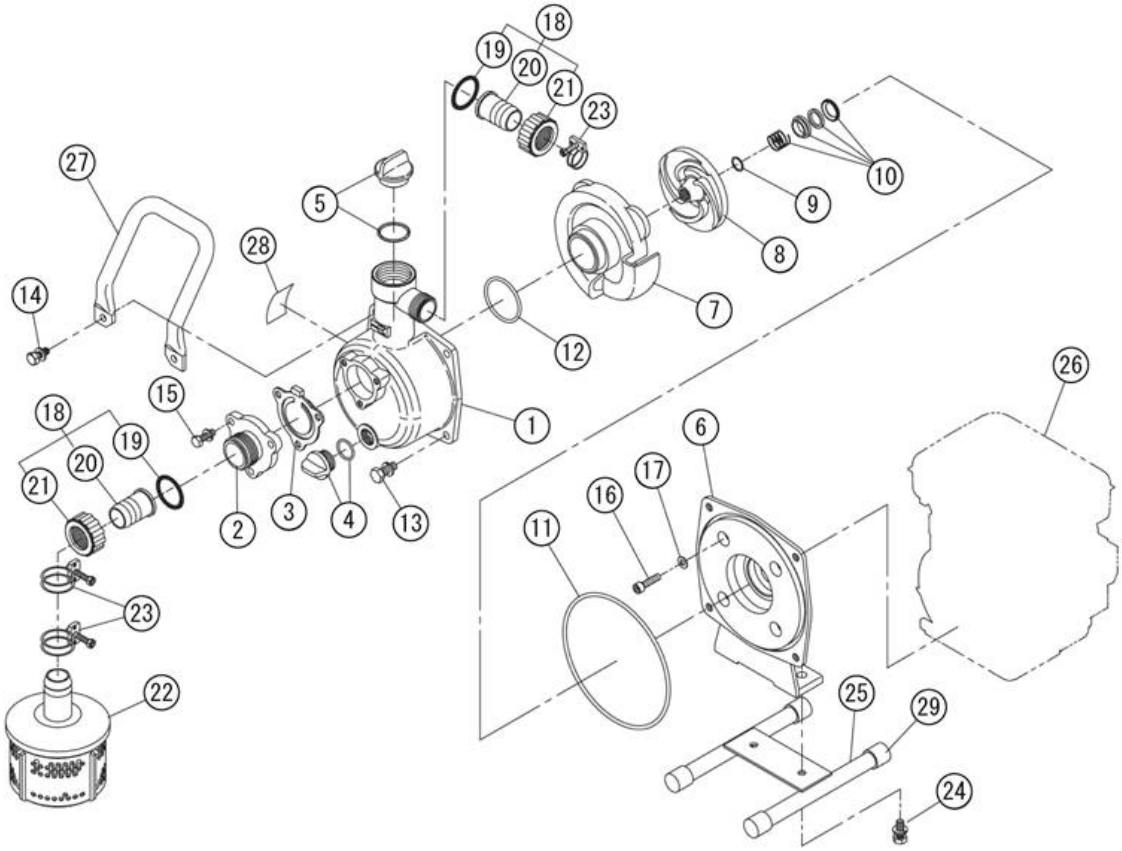

Figure 2 - Repair Parts Illustrations

Repair Parts List

Ref No.	Description	1G1XH	Qty
1	Pump Casing Kit	1G1X-001-96	1
	(includes Ref. Nos. 13 and 14)		
2	Suction Flange Kit	1G1X-050-96	1
	(includes Ref. No. 15)		
3	Check Valve Kit	1G1X-070-90	1
4	Drain Plug Kit	1G1X-170-90	1
	(includes Ref. No. 5)		
5	Fill Plug	Incl. w/ Ref. 4	
6	Adapter Kit	1G1X-030-96	1
	(includes Ref. Nos. 16 and 17)		
7	Volute Kit	1G1X-150-96	1
8	Impeller Kit	1G1X-010-96	1
	(includes Ref. No. 9)		
9	Impeller Shims	Incl. w/ Ref. 8	
10	Seal Kit	1G1X-300-90	1
	(includes Ref. Nos. 11 and 12)		
11, 12	Seal/O-Ring	Incl. w/ Ref. 10	
13, 14	Fastener	Incl. w/ Ref. 1	
15	Fastener	Incl. w/ Ref. 2	
16	Fastener	Incl. w/ Ref. 6	
17	Seal Washer	Incl. w/ Ref. 6	
18	Hose Nipple Kit	1G1X-172-90	1
	(includes Ref. Nos. 19, 20, 21, 22, 23 and 30)		
19	Seal/O-Ring	Incl. w/ Ref. 18	
20	Hose Nipple	Incl. w/ Ref. 18	
21	Coupling	Incl. w/ Ref. 18	
22	Strainer	Incl. w/ Ref. 18	
23	Hose Clamp	Incl. w/ Ref. 18	
24	Fastener	Incl. w/ Ref. 25	
25	Base Kit	1G1X-100-90	1
	(includes Ref. Nos. 24, 27 and 29)		
26	Engine	Replace Pump	
27	Handle	Incl. w/ Ref. 25	
28	Nameplate	N/A	
29	Cap	Incl. w/ Ref. 25	
30	Discharge Garden Hose Adapter (not shown)	Incl. w/ Ref. 18	

AMT Pump Company
(herein "AMT")
400 Spring Street
Royersford, PA 19468
Phone: (610) 948-3800
Fax: (610) 948-5300
www.amtpump.com

General Information

SALES POLICY: AMT products are sold through our established Distributors. We do not sell direct to the consumer or organization not entitled to trade recognition. Therefore, possession of our catalogs and/or price list(s) does not infer an offer to sell.

MINIMUM ORDER: We appreciate your order, however, all orders are subject to a minimum $35.00 net invoice charge (excluding freight). This applies to all pump and parts purchase orders.

PRICES: Prices are subject to change without notice. All orders accepted are subject to prices in effect at time of shipment.

PAYMENT TERMS: Terms, upon establishment of credit, are Net 30 days. Past due accounts may be subject to a service charge of 1.5% per month. Domestic or assignable letter of credit is required for all export trade.

PAST DUE ACCOUNTS: AMT reserves the right to withhold open account shipments on any past due account. Invoices are considered past due after thirty (30) days. In the interest of sound business, all orders are subject to approval of the Credit Department.

SHIPPING INSTRUCTIONS: All shipments will be made F.O.B. the factory. Where instructions for shipment do not appear on the order, the shipment will be made according to our best judgment. Full risk of loss (including transportation delays and losses) shall pass to the customer upon delivery of the products to the carrier at the F.O.B. point. When loss or delay occurs, primary responsibility for tracing rests with the customer. When there is LOSS or APPARENT VISIBLE DAMAGE to a shipment, when tendered for delivery, *DO NOT* give the carrier a clear receipt. Note such damage on the carrier's delivery receipt and *HAVE THE DRIVER SIGN THE RECEIPT.*

PRODUCT REVISIONS: AMT reserves the right to discontinue, change or improve its products or any portions thereof without being obligated to provide such a change or improvement for units sold and/or shipped prior to such a change or improvement.

LEAD TIME: Products designated "Quick Ship Product", also referred to as "QSP" will normally be shipped within 24 hours of receipt of a non-cancellable purchase order. Only limited quantities of "QSP" pumps are available.

STANDARD LEAD TIME: Lead time is two weeks for all non "QSP" product. AMT reserves the right to revise lead times as required due to availability of materials and all other causes beyond our control.

VIP SHIPMENT: Select AMT and IPT branded pumps are available for next day shipment for non-QSP (Quick Ship Products) items and subjected to a specific model surcharge per unit noted in the respective price book. Requires calling for availability, confirmation and a non-cancellable purchase order or credit card payment prior to shipment. The expedited shipping charges are an additional cost added separately from the VIP charges per item. AMT reserves the right to revise lead times as required due to availability of materials and all other causes beyond our control. QSP quantities are limited as determined by AMT.

ALL purchase orders must be submitted via hard copy sent to AMT customer service department by fax, EDI or e-mail.

RETURN GOODS POLICY: Goods shall not be returned without a return goods authorization number (RGA) issued by AMT customer service. The RGA number must be listed on the packing list. Only current model and part numbers with a valid date code may be returned (within one year from date of purchase). **A 20% restocking and packaging charge will apply to all returns. All shipping charges must be pre-paid. No exceptions.**

ORDER CHANGES BY CUSTOMER: Orders in process may not be changed except with written consent and may be subject to special charges.

12 Month Limited Warranty

EXTENT AND DURATION OF LIMITED WARRANTY

Coverage: AMT Pump Company (herein "AMT") or IPT Pumps by Gorman-Rupp (herein "IPT") or Gorman-Rupp Industries Division of the The Gorman-Rupp Company, Patterson, or the Gorman-Rupp Company (herein referred to as "G-R Unit) each individually warrants that its products and parts shall be free from defects in material and workmanship for twelve (12) months from the date of purchase by the original end user when installation is made and maintenance is performed in accordance with G-R Unit's recommendations. Wear and tear resulting from use and items normally consumed in use are not covered.

EXCEPTIONS

(A) This Limited Warranty shall not apply to mechanical seals in AMT or IPT pumps and the following products and parts: engines, motors, trade accessories and all other products, components, parts and materials not manufactured by the G-R Units. These items may, however, be covered by the warranties of their respective manufacturers. (B) This warranty does not extend to or apply to any unit which has been repaired or altered at any place other than by a G-R Unit, or by persons not expressly approved by a G-R Unit to make repairs or alterations, nor to any unit the serial number, model number or identification of which has been removed, defaced or altered. (C) This warranty does not extend to any product manufactured by a G-R Unit, which has been subjected to mis-use, neglect, accident, improper installation, or use in violation of instructions furnished by a G-R Unit. (D) Pump Kits: This warranty does not extend to any product sold by a G-R Unit unassembled as a Pump Kit. Pump Kits are warranted against defects in material and workmanship for 60 days from the date of shipment from a G-R Unit. Any Pump Kit parts deemed defective by a G-R Unit will be replaced free of charge within 60 days of shipment. Pump Kits are not returnable for credit.

LIMITATIONS

THE G-R UNITS' SOLE AND EXCLUSIVE WARRANTY WITH RESPECT TO THEIR PRODUCTS AND PARTS IS THIS LIMITED WARRANTY. THIS LIMITED WARRANTY IS IN LIEU OF ALL OTHER EXPRESS AND/OR IMPLIED WARRANTIES, INCLUDING IMPLIED WARRANTIES OF MERCHANTABILITY AND FITNESS FOR PARTICULAR PURPOSE.

EXCLUSIVE REMEDY AND DAMAGES

The sole and exclusive remedy for breach of this Warranty by a G-R Unit and the entire extent of its liability for such breach or for damages arising from the use of the products and parts covered under this Limited Warranty, shall be as follows:

1. **Repair or Replacement:** If inspection shows that any G-R Unit product or part covered under this Limited Warranty is defective in materials or workmanship, the G-R Unit shall repair or replace the defective or non-conforming product or part without charge, whichever the G-R Unit chooses. You must have properly maintained and used the product or part claimed to be defective in accordance with the maintenance schedule or manual, which comes with the product. No allowance will be made for labor, installation, removal, transportation or other charges incurred by you in connection with such repair or replacement.
2. To obtain the above remedy:
   - A. Immediately notify the G-R Unit upon discovery of the claimed defect in materials or workmanship and provide the serial number or date code of the product and/or part(s) or provide the G-R Unit with the invoice or bill of sale referencing the product by no later than the expiration date of the warranty period.
   - B. The G-R Unit will advise whether inspection will be necessary and how whether repair or replacement will be made. If inspection by the G-R Unit is necessary, the pump or defective part must be sent freight pre-paid to the G-R Unit. Return shipment will be F.O.B. the G-R Unit's plant.
   - C. **Return Goods Authorization Requirement:** No product will be accepted for return or replacement without the prior written authorization of the G-R Unit. Upon such authorization, and in accordance with instructions from the G-R Unit, the product will be returned to the G-R Unit, shipping charges prepaid by the Buyer.

3. **Damages:** The G-R Unit's liability for damages for breach of this Limited Warranty shall not exceed the amount of the purchase price of the product or part(s) in respect to which Such damages are claimed. **IN NO EVENT SHALL THE G-R UNITS BE LIABLE FOR INCIDENTAL, CONSEQUENTIAL OR SPECIAL DAMAGES FOR BREACH OF THIS LIMITED WARRANTY.**

Some states do not allow the exclusion or limitation of incidental or consequential damages, so the above limitation or exclusion may not apply to you. This Limited Warranty gives you specific legal rights, and you may also have other rights, which vary from state to state.