Please read and save this Repair Parts Manual. Read this manual and the General Operating Instructions carefully before attempting to assemble, install, operate or maintain the product described. Protect yourself and others by observing all safety information. The Safety Instructions are contained in the General Operating Instructions. Failure to comply with the safety instructions accompanying this product could result in personal injury and/or property damage! Retain instructions for future reference. AMT reserves the right to discontinue any model or change specifications at any time without incurring any obligation.

©2016 AMT Pump Company, A Subsidiary of The Gorman-Rupp Company, All Rights Reserved.

Periodic maintenance and inspection is required on all pumps to ensure proper operation. Unit must be clear of debris and sediment. Inspect for leaks and loose bolts. Failure to do so voids warranty.

4-Inch Self-Priming Centrifugal Pumps

Refer to pump manual 1808-634-00 for General Operating and Safety Instructions.

AMT® A Gorman-Rupp Company

DESCRIPTION

These centrifugal pumps are self-priming (to 20 ft. lift) units designed for high volume liquid transfer – irrigation, de-watering, lawn sprinkling, etc. These units can also accommodate semi-solids (up to 3/8" diameter), sediment laden liquids and liquids with entrained air or gases. Casing working pressure to 125 psi (862 kPa).

The units are equipped with a cast iron pump casing designed with a full dual volute, clog resistant semi-open stainless steel impeller and a cast iron adapter. Units are equipped with flapper valves to ensure a positive prime. A mechanical seal isolates the motor from the liquid in the pump casing. The units are coupled to 3450 RPM, totally enclosed fan cooled motors. All units are manual models, no controls are supplied. For use with nonflammable, non-abrasive liquids compatible with pump component materials.

⚠WARNING

All units are for use with non-flammable, non-abrasive liquids compatible with pump component materials.

MAINTENANCE

⚠WARNING

Make certain that the unit is disconnected and locked out from the power source before attempting to service or remove any components.

NOTE: Pump casing should be removed and inspected periodically to ensure that any foreign material or rust is not clogging internal pump parts. This unit is equipped with a dual volute pump casing. One of the volutes runs 180 degrees, all the way from side opposite discharge into discharge through a completely enclosed passageway. If foreign material clogs this area, it can be dislodged by using a wire or long spring.

REMOVAL OF OLD SHAFT SEAL

Refer to Figure 1

IMPORTANT: Always replace both seal seat (Ref. No. 28) and seal head (Ref. No. 27) to ensure proper mating of components! Also, impeller O-ring (Ref. No. 30) should be replaced anytime impeller screw (Ref. No. 15) has been removed.

1. Remove four bolts (Ref. No. 8) that connect adapter (Ref. No. 2) to casing (Ref. No. 7).
2. Remove casing and casing seal O-ring (Ref. No. 29).

⚠ CAUTION

Care should be taken not to "pinch" or "shave" the O-ring gasket between adapter and casing.

3. Using an hex wrench, remove impeller screw, impeller O-ring,and impeller (Ref. No. 13).

IMPORTANT: Care should be taken to ensure that same number of shim washers (Ref. No. 16) are replaced behind impeller as were removed. These shim washers are located directly behind impeller. These washers as well as impeller key (Ref. No. 14) become loose as impeller is removed.

4. Seal head and shaft sleeve (Ref. No. 6) can now be pulled from motor shaft.
5. Remove casing cover (Ref. No. 5) from adapter.
6. Pry seal seat from casing cover.
7. Push seal head from shaft sleeve.

INSTALLATION OF NEW SEAL

⚠ CAUTION

The precision lapped faces on mechanical seal are easily damaged. Handle your replacement seal carefully.

1. Thoroughly clean all surfaces of seal seat cavity.
2. Using a clean cloth, wipe shaft and shaft sleeve and make certain that they are perfectly clean.
3. Wet the rubber portion of new seal seat with a light coating of soapy water. While wearing clean gloves or using a clean light rag, press seal seat squarely into casing cover recess. Avoid scratching polished surface. If seal will not position properly, place a cardboard washer over polished surface and use a piece of pipe to press in, firmly but gently.
4. Dispose of cardboard washer. Check again to see that polished surface is free of dirt and all other foreign particles and that it has not been scratched or damaged. Install casing cover in adapter.
5. Wet the inside of rubber portion of new seal head with a light coating of soapy water. Slide head onto shaft sleeve. Slide shaft sleeve with seal head onto motor shaft. Seal head and seal seat will meet. Reinstall any shims which have been removed. (See SHIM ADJUSTMENT section.)

IMPORTANT: Before installing new shaft sleeve, apply a bead of non-hardening, pliable sealant (such as Permatex®, Form-A-Gasket® No. 2) to motor shaft shoulder.

6. Replace impeller key and impeller. Replace impeller O-ring before screwing impeller screw in place.
7. Reassemble pump.

4-Inch Self-Priming Centrifugal Pumps

8. A short “run-in” period may be necessary to provide completely leak free seal operation.

SHIM ADJUSTMENT

When installing a replacement impeller (Ref. No. 13) or motor (Ref. No. 1), it may be necessary to adjust the number of shims (Ref. No. 16) to ensure proper running clearance between impeller and casing (Ref. No. 7). Proceed as follows:

NOTE: A proper running clearance is less than 0.020”.

1. For impeller replacement, add one (1) shim in addition to those removed originally.
2. For motor replacement, add two (2) shims in addition to shims removed during disassembly.
3. Reassemble pump as described in steps 6 and 7. (See INSTALLATION OF NEW SEAL section.)

IMPORTANT: Be sure that casing is snugly in place and check shaft to make sure it is turning freely. If it turns freely, check to ensure that adapter/seal plate (Ref. No. 2 & 5) and casing are fitted metal-to-metal where they meet on outside. If they are not metal-to-metal, tighten fasteners (Ref. No. 8) and recheck shaft for free turning. Tighten carefully, turning shaft while tightening so that motor bearings are not damaged in the event that too many shims were installed. If shaft seizes before fasteners are completely tight, disassembly pump and remove one (1) shim and repeat reassembly.

4-Inch Self-Priming Centrifugal Pumps

For Repair Parts contact dealer where pump was purchased.

Please provide following information:
-Model Number
-Serial Number (if any)

Part description and number as shown in parts list

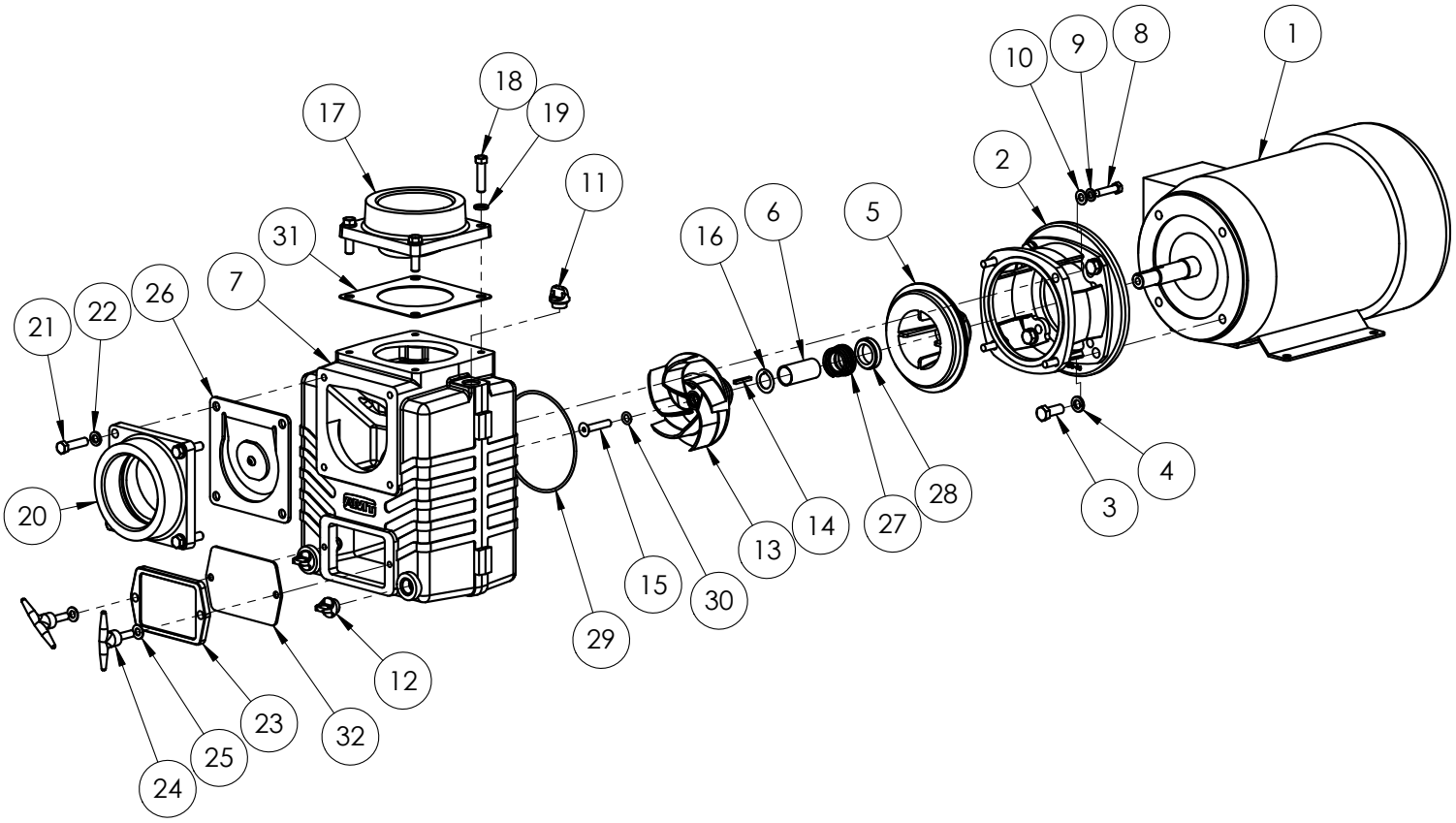

Figure 1 - Repair Parts Illustrations

Repair Parts List

Ref No.	Description	Part Number for Models 4873-95 4871-95	4872-95	Qty
1	Motor - 1-Phase	1626-080-00	N/A	1
	Motor - 3-Phase	1627-354-00	1627-355-00	1
2	Adapter Kit	3150-035-95	3150-035-95	1
	(includes Ref. Nos. 2, 3, 4, 5 and 6)			
3	Hex Head Screw	Incl. w/Ref. 2	Incl. w/Ref. 2	4
4	Lock Washer	Incl. w/Ref. 2	Incl. w/Ref. 2	4
5	Casing Cover	3150-025-09 & Incl. w/Ref. 2	3150-025-09 & Incl. w/Ref. 2	1
6	Shaft Sleeve	1555-142-00 & Incl. w/Ref. 2	1555-142-00 & Incl. w/Ref. 2	1
7	Casing Kit	4870-001-95	4870-002-95	1
	(includes Ref. Nos. 7, 8, 9, 10, 11 and 12))			
8	Hex Head Screw	Incl. w/Ref. 7	Incl. w/Ref. 7	4
9	Lock Washer	Incl. w/Ref. 7	Incl. w/Ref. 7	4
10	Flat Washer	Incl. w/Ref. 7	Incl. w/Ref. 7	4
11	1/2” NPT Fill Plug	Incl. w/Ref. 7	Incl. w/Ref. 7	1
12	1/2” NPT Drain Plug	Incl. w/Ref. 7	Incl. w/Ref. 7	2
13	Impeller Kit	4871-010-98	4872-010-98	1
	(includes Ref. Nos. 13, 14, 15 and 16)			
14	Shaft Key	Incl. w/Ref. 13	Incl. w/Ref. 13	1
15	Impeller Screw	Incl. w/Ref. 13	Incl. w/Ref. 13	1
16	Impeller Shim Kit	Incl. w/Ref. 13	Incl. w/Ref. 13	1
17	Discharge Flange Kit	4870-080-95	4870-080-95	1
	(includes Ref. Nos. 17, 18 and 19)			
18	Hex Head Screw	Incl. w/Ref. 17	Incl. w/Ref. 17	4
19	Lock Washer	Incl. w/Ref. 17	Incl. w/Ref. 17	4
20	Suction Flange Kit	4870-050-95	4870-050-95	1
	(includes Ref. Nos. 20, 21 and 22)			
21	Hex Head Screw	Incl. w/Ref. 20	Incl. w/Ref. 20	4
22	Lock Washer	Incl. w/Ref. 20	Incl. w/Ref. 20	4
23	Cleanout Cover Kit	4870-040-95	4870-040-95	1
	(includes Ref. Nos. 23, 24 and 25)			
24	Hex Head Screw	Incl. w/Ref. 23	Incl. w/Ref. 23	2
25	Flat Washer	Incl. w/Ref. 23	Incl. w/Ref. 23	2
26	Check Valve Assembly - Neoprene	399C-070-90	399C-070-90	1
	Check Valve Assembly - Viton (optional)	399C-075-90	399C-075-90	1
	Check Valve Assembly - EPDM (optional)	399C-076-90	399C-076-90	1
27 & 28	Shaft Seal Assembly - Buna	1640-163-90	1640-163-90	1
	Shaft Seal Assembly - Viton/SiC/SiC (optional)	1640-167-90	1640-167-90	1
	Shaft Seal Assembly - Viton/Car/Cer (optional)	1640-163-91	1640-163-91	1
	Shaft Seal Assembly - EPDM (optional)	1645-421-00	1645-421-00	1
KIT	Gasket Kit - Buna/Neoprene	4870-300-90	4870-300-90	1
	Gasket Kit - Viton (optional)	4870-301-90	4870-301-90	1
	Gasket Kit - EPDM (optional)	4870-302-90	4870-302-90	1
	(includes Ref. Nos. 29, 30, 31 and 32)			
29	Casing O-Ring	Incl. w/Ref. KIT	Incl. w/Ref. KIT	1
30	Impeller O-Ring	Incl. w/Ref. KIT	Incl. w/Ref. KIT	1
31	Flange Gasket	Incl. w/Ref. KIT	Incl. w/Ref. KIT	1
32	Cleanout Gasket	Incl. w/Ref. KIT	Incl. w/Ref. KIT	1

NOTES:

NOTES:

AMT Pump Company
(herein "AMT")
400 Spring Street
Royersford, PA 19468
Phone: (610) 948-3800
Fax: (610) 948-5300
www.amtpump.com

General Information

SALES POLICY: AMT products are sold through our established Distributors. We do not sell direct to the consumer or organization not entitled to trade recognition. Therefore, possession of our catalogs and/or price list(s) does not infer an offer to sell.

MINIMUM ORDER: We appreciate your order, however, all orders are subject to a minimum $35.00 net invoice charge (excluding freight). This applies to all pump and parts purchase orders.

PRICES: Prices are subject to change without notice. All orders accepted are subject to prices in effect at time of shipment.

PAYMENT TERMS: Terms, upon establishment of credit, are Net 30 days. Past due accounts may be subject to a service charge of 1.5% per month. Domestic or assignable letter of credit is required for all export trade.

PAST DUE ACCOUNTS: AMT reserves the right to withhold open account shipments on any past due account. Invoices are considered past due after thirty (30) days. In the interest of sound business, all orders are subject to approval of the Credit Department.

SHIPPING INSTRUCTIONS: All shipments will be made F.O.B. the factory. Where instructions for shipment do not appear on the order, the shipment will be made according to our best judgment. Full risk of loss (including transportation delays and losses) shall pass to the customer upon delivery of the products to the carrier at the F.O.B. point. When loss or delay occurs, primary responsibility for tracing rests with the customer. When there is LOSS or APPARENT VISIBLE DAMAGE to a shipment, when tendered for delivery, *DO NOT* give the carrier a clear receipt. Note such damage on the carrier's delivery receipt and *HAVE THE DRIVER SIGN THE RECEIPT.*

PRODUCT REVISIONS: AMT reserves the right to discontinue, change or improve its products or any portions thereof without being obligated to provide such a change or improvement for units sold and/or shipped prior to such a change or improvement.

LEAD TIME: Products designated "Quick Ship Product", also referred to as "QSP" will normally be shipped within 24 hours of receipt of a non-cancellable purchase order. Only limited quantities of "QSP" pumps are available.

STANDARD LEAD TIME: Lead time is two weeks for all non "QSP" product. AMT reserves the right to revise lead times as required due to availability of materials and all other causes beyond our control.

VIP SHIPMENT: Select AMT and IPT branded pumps are available for next day shipment for non-QSP (Quick Ship Products) items and subjected to a specific model surcharge per unit noted in the respective price book. Requires calling for availability, confirmation and a non-cancellable purchase order or credit card payment prior to shipment. The expedited shipping charges are an additional cost added separately from the VIP charges per item. AMT reserves the right to revise lead times as required due to availability of materials and all other causes beyond our control. QSP quantities are limited as determined by AMT.

ALL purchase orders must be submitted via hard copy sent to AMT customer service department by fax, EDI or e-mail.

RETURN GOODS POLICY: Goods shall not be returned without a return goods authorization number (RGA) issued by AMT customer service. The RGA number must be listed on the packing list. Only current model and part numbers with a valid date code may be returned (within one year from date of purchase). **A 20% restocking and packaging charge will apply to all returns. All shipping charges must be pre-paid. No exceptions.**

ORDER CHANGES BY CUSTOMER: Orders in process may not be changed except with written consent and may be subject to special charges.

12 Month Limited Warranty

EXTENT AND DURATION OF LIMITED WARRANTY

Coverage: AMT Pump Company (herein "AMT") or IPT Pumps by Gorman-Rupp (herein "IPT") or Gorman-Rupp Industries Division of the The Gorman-Rupp Company, Patterson, or the Gorman-Rupp Company (herein referred to as "G-R Unit) each individually warrants that its products and parts shall be free from defects in material and workmanship for twelve (12) months from the date of purchase by the original end user when installation is made and maintenance is performed in accordance with G-R Unit's recommendations. Wear and tear resulting from use and items normally consumed in use are not covered.

EXCEPTIONS

(A) This Limited Warranty shall not apply to mechanical seals in AMT or IPT pumps and the following products and parts: engines, motors, trade accessories and all other products, components, parts and materials not manufactured by the G-R Units. These items may, however, be covered by the warranties of their respective manufacturers. (B) This warranty does not extend to or apply to any unit which has been repaired or altered at any place other than by a G-R Unit, or by persons not expressly approved by a G-R Unit to make repairs or alterations, nor to any unit the serial number, model number or identification of which has been removed, defaced or altered. (C) This warranty does not extend to any product manufactured by a G-R Unit, which has been subjected to mis-use, neglect, accident, improper installation, or use in violation of instructions furnished by a G-R Unit. (D) Pump Kits: This warranty does not extend to any product sold by a G-R Unit unassembled as a Pump Kit. Pump Kits are warranted against defects in material and workmanship for 60 days from the date of shipment from a G-R Unit. Any Pump Kit parts deemed defective by a G-R Unit will be replaced free of charge within 60 days of shipment. Pump Kits are not returnable for credit.

LIMITATIONS

THE G-R UNITS' SOLE AND EXCLUSIVE WARRANTY WITH RESPECT TO THEIR PRODUCTS AND PARTS IS THIS LIMITED WARRANTY. THIS LIMITED WARRANTY IS IN LIEU OF ALL OTHER EXPRESS AND/OR IMPLIED WARRANTIES, INCLUDING IMPLIED WARRANTIES OF MERCHANTABILITY AND FITNESS FOR PARTICULAR PURPOSE.

EXCLUSIVE REMEDY AND DAMAGES

The sole and exclusive remedy for breach of this Warranty by a G-R Unit and the entire extent of its liability for such breach or for damages arising from the use of the products and parts covered under this Limited Warranty, shall be as follows:

1. **Repair or Replacement:** If inspection shows that any G-R Unit product or part covered under this Limited Warranty is defective in materials or workmanship, the G-R Unit shall repair or replace the defective or non-conforming product or part without charge, whichever the G-R Unit chooses. You must have properly maintained and used the product or part claimed to be defective in accordance with the maintenance schedule or manual, which comes with the product. No allowance will be made for labor, installation, removal, transportation or other charges incurred by you in connection with such repair or replacement.
2. To obtain the above remedy:
   - A. Immediately notify the G-R Unit upon discovery of the claimed defect in materials or workmanship and provide the serial number or date code of the product and/or part(s) or provide the G-R Unit with the invoice or bill of sale referencing the product by no later than the expiration date of the warranty period.
   - B. The G-R Unit will advise whether inspection will be necessary and how whether repair or replacement will be made. If inspection by the G-R Unit is necessary, the pump or defective part must be sent freight pre-paid to the G-R Unit. Return shipment will be F.O.B. the G-R Unit's plant.
   - C. **Return Goods Authorization Requirement:** No product will be accepted for return or replacement without the prior written authorization of the G-R Unit. Upon such authorization, and in accordance with instructions from the G-R Unit, the product will be returned to the G-R Unit, shipping charges prepaid by the Buyer.

3. **Damages:** The G-R Unit's liability for damages for breach of this Limited Warranty shall not exceed the amount of the purchase price of the product or part(s) in respect to which Such damages are claimed. **IN NO EVENT SHALL THE G-R UNITS BE LIABLE FOR INCIDENTAL, CONSEQUENTIAL OR SPECIAL DAMAGES FOR BREACH OF THIS LIMITED WARRANTY.**

Some states do not allow the exclusion or limitation of incidental or consequential damages, so the above limitation or exclusion may not apply to you. This Limited Warranty gives you specific legal rights, and you may also have other rights, which vary from state to state.

pumpbiz

A Gorman-Rupp Company

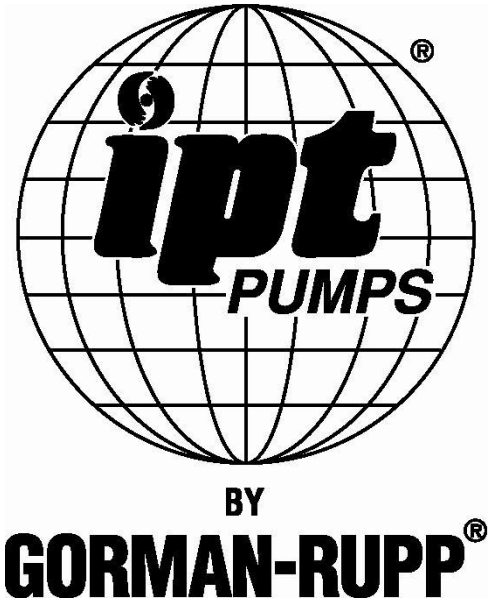

www.amtpump.com